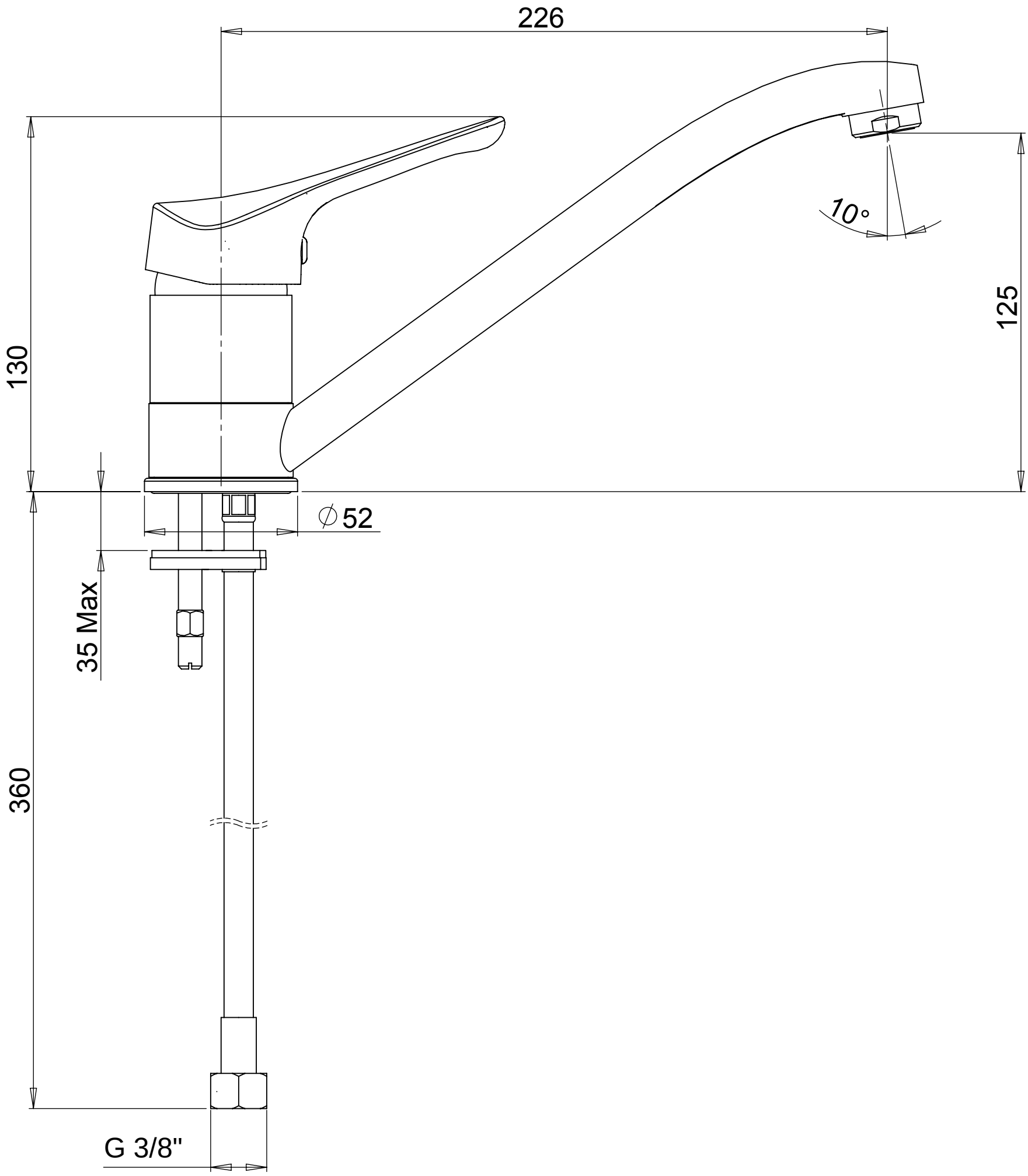
226
10°
125
130
∅52
35 Max
360
G 3/8"